BENE LIVING BETTER SOLUTION

BENE

HIGH-GRADE
STORAGE
SOLUTION SYSTEM

CATALOG

2026

@Benehardware @benehardware @Benehardware

+853 65596276
+86 19875987610
sales@benehardware.com
www.benehardware.com

BENE LIVING BETTER SOLUTION

FOCUSED ORGANIZATION & STORAGE SOLUTIONS

专 注 收 纳 解 决 方 案

”

20-year kitchen storage hardware manufacturer with 8,000+ SKUs keeps less than 1‰ complaint rate.

2026

Miele

Product Catalog

Corner Cabinet Series 08-29

Half-open swing tray 10-13
Full-open swing tray 14-15
Magic corner 16-19
2 layers revolving basket 20-23
3 layers revolving basket 24-25
L/R magic corner 26-29

Base Cabinet Solution 30-55

Pull out drawer basket 32-35
Four side basket 36-37
Narrow bottle rack 38-41
Bread basket 42-45
Oval wire basket 46-49
Oval wire bread basket 50-53
Round wire narrow bottle basket 54-55

Tall Cabinet Solution 56-61

Pull out pantry 58-61

Wall Cabinet Series 62-77

Elevator basket 64-69
Dish rack 70-73
C-dish rack 74-77

Trash Can Series 78-83

Dust bin 80-83

BENE LIVING BETTER SOLUTION

FOCUSED ORGANIZATION & STORAGE SOLUTIONS

专 注 收 纳 解 决 方 案

Corner Cabinet Solution

Corner Cabinet Solution

HALF-OPEN
SWING TRAY

30KG CAPACITY

FLEXIBLE STORAGE

MULTILAYER DESIGN

ANTI-SLIP DESIGN

SILENT SOFT CLOSE

ADJUSTABLE HEIGHT

MULTILATERAL SUPPORT

EASY INSTALLATION

UTILIZES CORNERS

HALF-OPEN SWING TRAY

Corner Cabinet Solution

Our corner cabinet storage solution makes full use of kitchen corner space with rotating shelves, neatly storing food, cookware, and tableware. It is convenient to access and stylishly designed, keeping your kitchen organized and efficient.

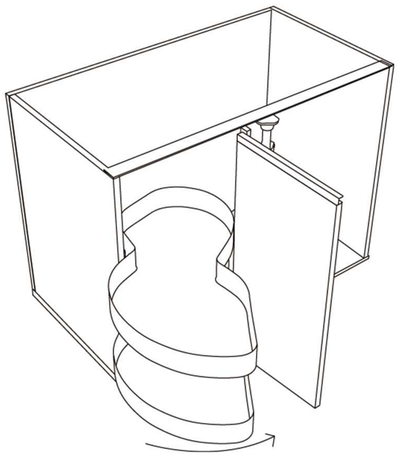

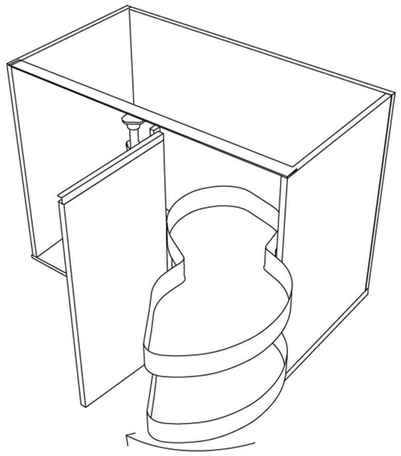

Opening size：450/500/600

BOARD-CHROME

BOARD-GREY

PLATE METAL-GREY

BOARD-CHROME
/
BOARD-GREY

ITEM CODE	CABINET	LAYERS	SIZE	FINISH	MATERIAL	DIRECTION
XH-03-004-618/621	900mm	2	W830*D490*H600~750MM	CHROME/GREY	IRON+MDF BOARD	R/L
XH-03-004-619/622	1000mm	2	W930*D490*H650~800MM	CHROME/GREY	IRON+MDF BOARD	R/L
XH-03-004-620/624	1200mm	2	W1030*D490*H650~800MM	CHROME/GREY	IRON+MDF BOARD	R/L

Accessory： W OR W/O ANTI-SLIP MAT

MOQ: EACH SPECIFICATION 50PCS

PLATE METAL-GREY

ITEM CODE	CABINET	LAYERS	SIZE	FINISH	MATERIAL	DIRECTION
XH-03-004-624	900mm	2	W830*D490*H600~750MM	GREY	GALVANIZED STEEL PLATE	R/L
XH-03-004-625	1000mm	2	W930*D490*H650~800MM	GREY	GALVANIZED STEEL PLATE	R/L
XH-03-004-626	1200mm	2	W1030*D490*H650~800MM	GREY	GALVANIZED STEEL PLATE	R/L

Accessory： W OR W/O ANTI-SLIP MAT

MOQ: EACH SPECIFICATION 50PCS

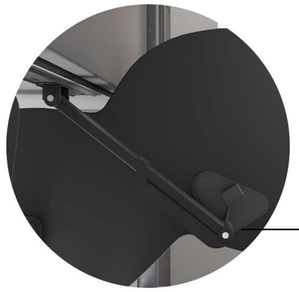

Upgrade structure easy **Take Out And Cleaning**

Multilateral support improve the loading capacity from 20kgs → **30kgs**

FULL-OPEN SWING TRAY

Corner Cabinet Solution

Our corner cabinet storage solution makes full use of kitchen corner space with a rotating shelf, neatly organizing food, cookware, and tableware. It enables convenient access, features a stylish design, and keeps your kitchen tidy and efficient.

TWO LAYERS

ITEM CODE	CABINET	LAYERS	SIZE	FINISH	MATERIAL	DIRECTION
XH-03-004-627	800mm	2	W790*D490*H650~800MM	CHROME/GREY	GALVANIZED STEEL PLATE	R/L
XH-03-004-628	900mm	2	W820*D490*H650~800MM	CHROME/GREY	GALVANIZED STEEL PLATE	R/L
XH-03-004-629	1000mm	2	W920*D490*H650~800MM	CHROME/GREY	GALVANIZED STEEL PLATE	R/L

Accessory: W OR W/O ANTI-SLIP MAT
MOQ: EACH SPECIFICATION 50PCS

THREE LAYERS

ITEM CODE	CABINET	LAYERS	SIZE	FINISH	MATERIAL	DIRECTION
XH-03-004-630	900mm	3	W830*D490*H964~1000MM	CHROME/GREY	GALVANIZED STEEL PLATE	R/L

Accessory: W OR W/O ANTI-SLIP MAT
MOQ: EACH SPECIFICATION 50PCS

Upgrage exclusive **Full Open** design

HALF-OPEN

FULL-OPEN

Corner Cabinet Solution

MAGIC
CORNER

- FLEXIBLE STORAGE
- 50KG CAPACITY
- SILENT SOFT CLOSE
- MAXIMIZES SPACE
- EASY INSTALLATION
- ANTI-SLIP DESIGN
- 50,000 TIMES CYCLES
- 53MM RAIL
- ADJUSTABLE HEIGHT

MAGIC CORNER

Corner Cabinet Solution

It makes full use of corner space with pull-out tiers. It is very suitable for storing various items such as dry goods and snacks, allowing items to be placed neatly and accessibly. Say goodbye to cluttered corners and embrace a tidy and efficient kitchen storage experience.

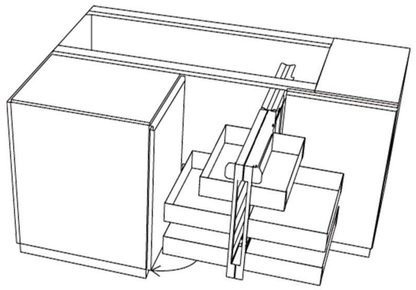

Opening size：400/450

New Update: Slide upgrade from H45mm → **H53mm** heavy duty slide,

which improve the loading capacity from 35kgs → **50kgs**

PLATE METAL-GREY
/
PLATE METAL-WHITE

ITEM CODE	CABINET	LAYERS	SIZE	FINISH	MATERIAL
XH-03-004-631	800MM	2	W600*D472*H618MM	GREY/BLACK/WHITE	GALVANIZED STEEL
XH-03-004-633	800MM	3	W600*D472*H718MM	GREY/BLACK/WHITE	GALVANIZED STEEL
XH-03-004-632	900MM	2	W660*D472*H618MM	GREY/BLACK/WHITE	GALVANIZED STEEL
XH-03-004-634	900MM	3	W660*D472*H718MM	GREY/BLACK/WHITE	GALVANIZED STEEL

Accessory：W OR W/O ANTI-SLIP MAT
MOQ: EACH SPECIFICATION 50PCS

GLASS-GREY

ITEM CODE	CABINET	LAYERS	SIZE	FINISH	MATERIAL
XH-03-004-639	900MM	2	W600*D455*H590MM	GREY	GLASS+ALU+SUS201

Accessory：W OR W/O ANTI-SLIP MAT
MOQ: EACH SPECIFICATION 50PCS

PLATE METAL-GREY

PLATE METAL-WHITE

PLATE METAL-GREY

PLATE METAL-WHITE

IRON-WIRE

GLASS-GREY

BOARD-GREY

BOARD-CHROME

IRON-WIRE

ITEM CODE	CABINET	LAYERS	SIZE	FINISH	MATERIAL
XH-03-004-635	800MM	2	W600*D472*H618MM	CHROME	IRON
XH-03-004-637	800MM	3	W600*D472*H718MM	CHROME	IRON
XH-03-004-636	900MM	2	W660*D472*H618MM	CHROME	IRON
XH-03-004-638	900MM	3	W660*D472*H718MM	CHROME	IRON

MOQ: EACH SPECIFICATION 50PCS

BOARD-GREY
/
BOARD-CHROME

ITEM CODE	CABINET	LAYERS	SIZE	FINISH	MATERIAL
XH-03-004-640/642	800MM	2	W600*D472*H618MM	GREY/CHROME	IRON+MDF BOARD
XH-03-004-641/643	900MM	2	W660*D472*H618MM	GREY/CHROME	IRON+MDF BOARD

Accessory：W OR W/O ANTI-SLIP MAT
MOQ: EACH SPECIFICATION 50PCS

Corner Cabinet Solution

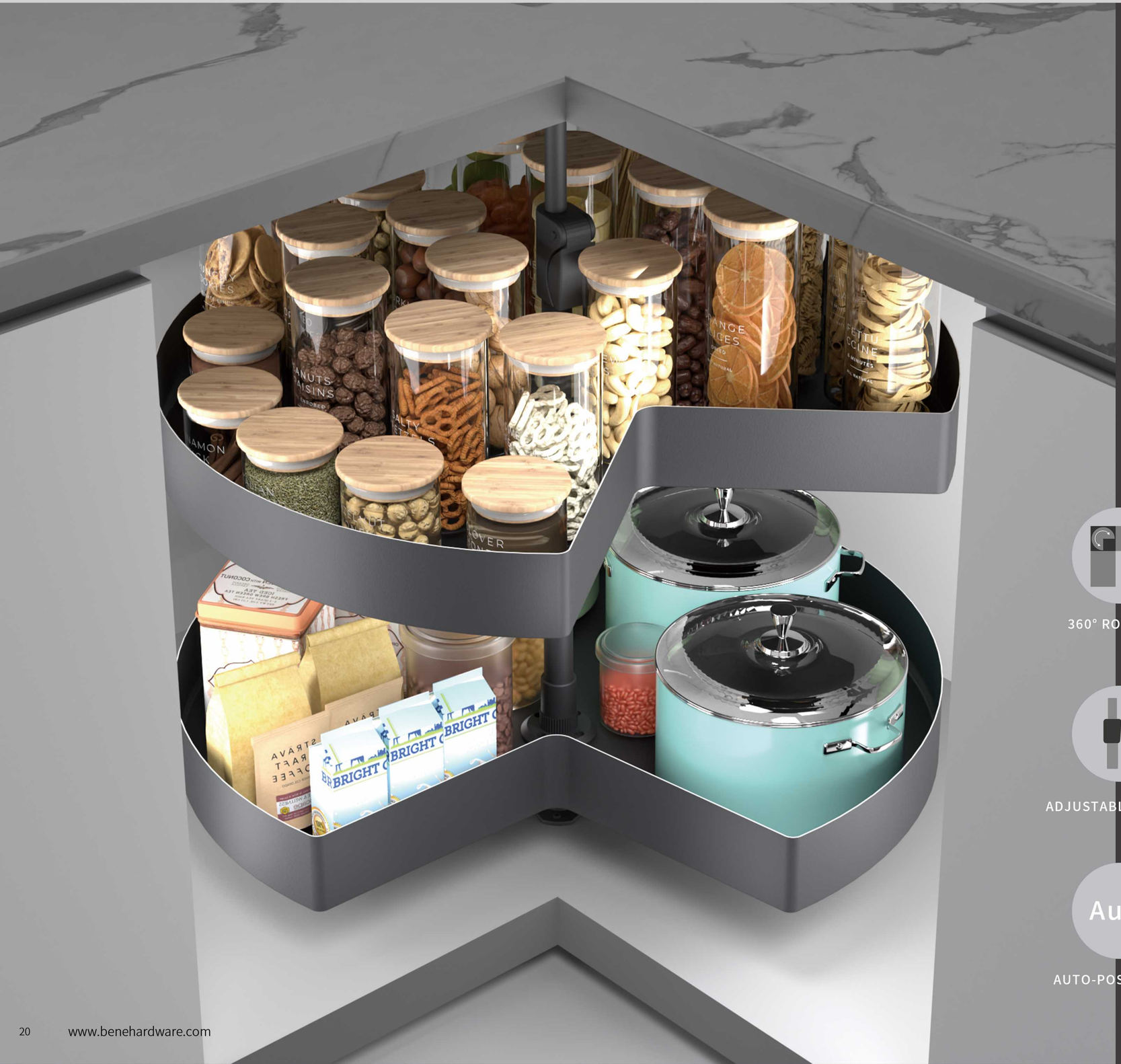

REVOLVING
BASKET

360° ROTATION

EASY CLEANING

USES DEAD SPACE

ADJUSTABLE HEIGHT

FLEXIBLE STORAGE

EASY ACCESS

AUTO-POSITIONING

ANTI-SLIP DESIGN

15KG PER LAYER

2 LAYERS REVOLVING BASKET

Corner Cabinet Solution

It makes full use of corner space with pull-out tiers. It is very suitable for storing various items such as dry goods and snacks, allowing items to be placed neatly and accessibly. Say goodbye to cluttered corners and embrace a tidy and efficient kitchen storage experience.

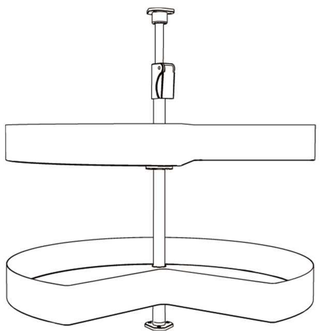

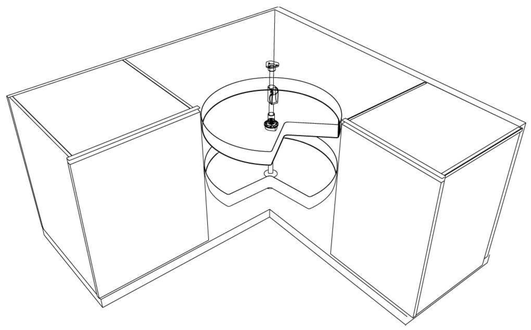

PLATE METAL-GREY

BOARD-CHROME

BOARD-GREY

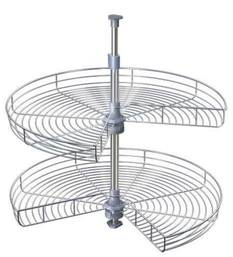

IRON-WIRE

PLATE METAL-GREY

ITEM CODE	CABINET	SIZE	FINISH	MATERIAL
XH-03-004-664	800MM	W710*H650~800MM	GREY	GALVANIZED STEEL
XH-03-004-665	900MM	W810*H650~800MM	GREY	GALVANIZED STEEL

Accessory: W OR W/O ANTI-SLIP MAT
MOQ: EACH SPECIFICATION 50PCS

BOARD-CHROME
/
BOARD-GREY

ITEM CODE	CABINET	SIZE	FINISH	MATERIAL
XH-03-004-660/662	800MM	W710*H650~800MM	GREY/CHROME	IRON+MDF BOARD
XH-03-004-661/663	900MM	W810*H650~800MM	GREY/CHROME	IRON+MDF BOARD

Accessory: W OR W/O ANTI-SLIP MAT
MOQ: EACH SPECIFICATION 50PCS

IRON-WIRE

ITEM CODE	CABINET	SIZE	FINISH	MATERIAL
XH-03-004-666	800MM	W710*H650~800MM	CHROME	IRON
XH-03-004-667	900MM	W810*H650~800MM	CHROME	IRON
XH-03-004-668	1000MM	W910*H650~800MM	CHROME	IRON

MOQ: EACH SPECIFICATION 50PCS

With **Built-in Positioning Function**, making storage even simpler.

3 LAYERS REVOLVING BASKET

Corner Cabinet Solution

It makes full use of corner space with pull-out tiers. It is very suitable for storing various items such as dry goods and snacks, allowing items to be placed neatly and accessibly. Say goodbye to cluttered corners and embrace a tidy and efficient kitchen storage experience.

PLATE METAL-GREY

ITEM CODE	CABINET	SIZE	FINISH	MATERIAL
XH-03-004-669	800MM	D730*H768-800MM	GREY	GALVANIZED STEEL PLATE
XH-03-004-670	900MM	D830*H768-800MM	GREY	GALVANIZED STEEL PLATE

Accessory: W OR W/O ANTI-SLIP MAT
MOQ: EACH SPECIFICATION 50PCS

BOARD-GREY

ITEM CODE	CABINET	SIZE	FINISH	MATERIAL
XH-03-004-671	800MM	D730*H768-800MM	GREY	IRON+MDF BOARD
XH-03-004-672	900MM	D830*H768-800MM	GREY	IRON+MDF BOARD

Accessory: W OR W/O ANTI-SLIP MAT
MOQ: EACH SPECIFICATION 50PCS

PLATE METAL-GREY

BOARD-GREY

Corner Cabinet Solution

MAGIC
CORNER L/R

USES DEAD SPACE

EASY CLEANING

ADJUSTABLE HEIGHT

SEPARATE LAYERS

50,000 TEST CYCLES

SILENT SOFT CLOSE

EASY ACCESS

ANTI-SLIP DESIGN

LEFT/RIGHT UNIVERSAL

L/R MAGIC CORNER

Corner Cabinet Solution

By virtue of its pull-out tiers, it fully utilizes corner space. It is ideally suited for storing various items such as dry goods and snacks, keeping them neatly organized and easily accessible. Say goodbye to cluttered corners and embrace a tidy, efficient kitchen storage experience.

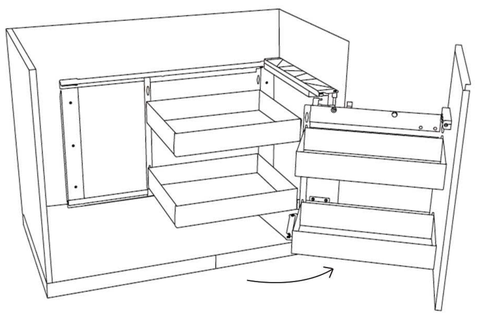

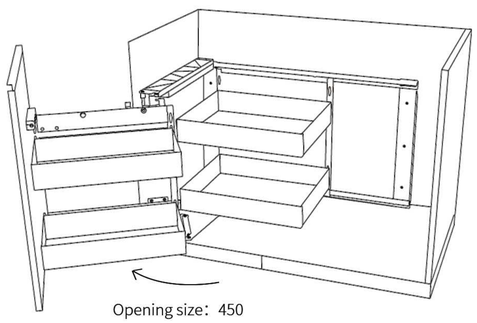

Opening size：450

PLATE METAL-GREY

BOARD-GREY

GLASS-GREY

IRON-WIRE

PLATE METAL-GREY

ITEM CODE	CABINET	LAYERS	SIZE	FINISH	MATERIAL	DIRECTION
XH-03-004-673	900MM	2	W370*D465*H100MM	GREY	IRON+GALVANIZED STEEL	R/L

Accessory：W OR W/O ANTI-SLIP MAT
MOQ: EACH SPECIFICATION 50PCS

BOARD-GREY

ITEM CODE	CABINET	LAYERS	SIZE	FINISH	MATERIAL	DIRECTION
XH-03-004-674	900MM	2	W370*D465*H100MM	GREY	IRON+MDF BOARD	R/L

Accessory：W OR W/O ANTI-SLIP MAT
MOQ: EACH SPECIFICATION 50PCS

GLASS-GREY

ITEM CODE	CABINET	LAYERS	SIZE	FINISH	MATERIAL	DIRECTION
XH-03-004-675	900MM	2	W370*D465*H100MM	GREY	GLASS+ALU+SUS201	R/L

Accessory：W OR W/O ANTI-SLIP MAT
MOQ: EACH SPECIFICATION 50PCS

IRON-WIRE

ITEM CODE	CABINET	LAYERS	SIZE	FINISH	MATERIAL	DIRECTION
XH-03-004-676	900MM	2	W370*D465*H100MM	CHROME	IRON	R/L

MOQ: EACH SPECIFICATION 50PCS

Universal for **Left** and **Right**

Base Cabinet Solution

Base Cabinet Solution

PULL OUT
DRAWER BASKET

RUST RESISTANT

EASY CLEANING

QUICK ASSEMBLY

DOOR-COMPATIBLE

SEPARATE LAYERS

SILENT SOFT CLOSE

30KG CAPACITY

ANTI-SLIP DESIGN

MODULAR STORAGE

Base Cabinet Solution

PULL OUT DRAWER BASKET

Base Cabinet Solution

It makes full use of corner space with pull-out tiers.
It is very suitable for storing various items such as dry goods and snacks, allowing items to be placed neatly and accessibly. Say goodbye to cluttered corners and embrace a tidy and efficient kitchen storage experience.

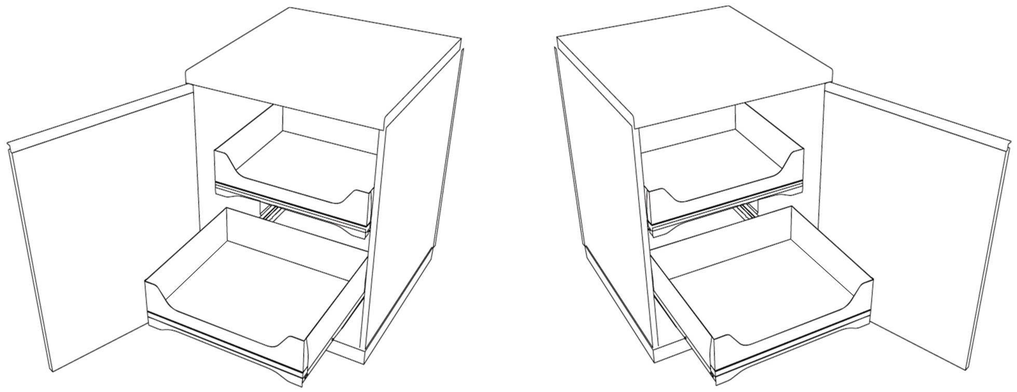

PLATE METAL-GREY

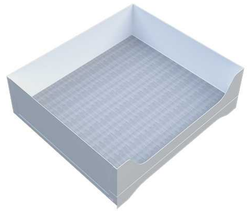

PLATE METAL-WHITE

ACCESSORY

BAMBOO CUTLERY TRAY
(GREY / VARNISH)

STORAGE RACK

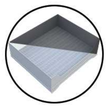

PLATE METAL-GREY
/
PLATE METAL-WHITE

ITEM CODE	CABINET	SIZE	FINISH	MATERIAL
XH-03-004-331	450MM	W390*D440*H157MM	GREY/BLACK/WHITE	GALVANIZED STEEL
XH-03-004-333	500MM	W440*D440*H157MM	GREY/BLACK/WHITE	GALVANIZED STEEL
XH-03-004-335	600MM	W540*D440*H157MM	GREY/BLACK/WHITE	GALVANIZED STEEL
XH-03-004-336	700MM	W640*D440*H157MM	GREY/BLACK/WHITE	GALVANIZED STEEL
XH-03-004-339	800MM	W740*D440*H157MM	GREY/BLACK/WHITE	GALVANIZED STEEL
XH-03-004-341	900MM	W840*D440*H157MM	GREY/BLACK/WHITE	GALVANIZED STEEL

Accessory：W OR W/O ANTI-SLIP MAT
MOQ: EACH SPECIFICATION 50PCS

INSTRUCTIONS FOR USE

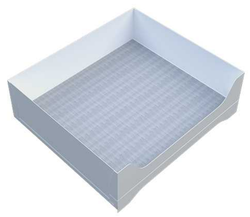

DRAWER BASKET

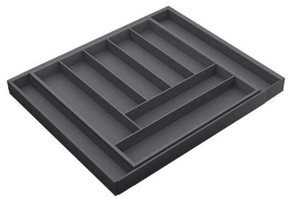

BAMBOO CUTLERY

BOWL & PLATE RACK

FOUR SIDE BASKET

Base Cabinet Solution

It makes full use of corner space with pull-out tiers.
It is very suitable for storing various items such as dry goods and snacks, allowing items to be placed neatly and accessible. Say goodbye to cluttered corners and embrace a tidy and efficient kitchen storage experience.

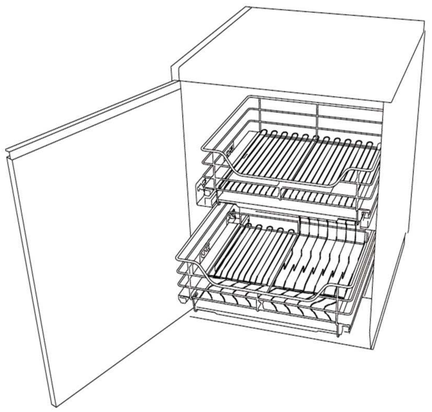

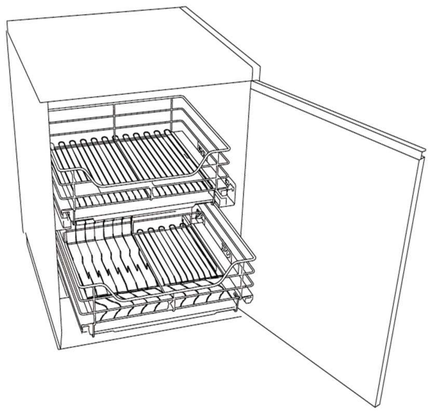

DISH RACK-ROUND

ITEM CODE	CABINET	SIZE	TYPE	FINISH	MATERIAL
XH-03-004-652	600MM	W517*D460*H169MM	ROUND	CHROME	IRON/SUS 201/SUS 304
XH-03-004-653	700MM	W617*D460*H169MM	ROUND	CHROME	IRON/SUS 201/SUS 304
XH-03-004-654	800MM	W717*D460*H169MM	ROUND	CHROME	IRON/SUS 201/SUS 304
XH-03-004-655	900MM	W817*D460*H169MM	ROUND	CHROME	IRON/SUS 201/SUS 304

MOQ: EACH SPECIFICATION 50PCS

DISH RACK-SQUARE

ITEM CODE	CABINET	SIZE	TYPE	FINISH	MATERIAL
XH-03-004-656	600MM	W517*D460*H169MM	SQUARE	CHROME	IRON/SUS 201/SUS 304
XH-03-004-657	700MM	W617*D460*H169MM	SQUARE	CHROME	IRON/SUS 201/SUS 304
XH-03-004-658	800MM	W717*D460*H169MM	SQUARE	CHROME	IRON/SUS 201/SUS 304
XH-03-004-659	900MM	W817*D460*H169MM	SQUARE	CHROME	IRON/SUS 201/SUS 304

MOQ: EACH SPECIFICATION 50PCS

Base Cabinet Solution

FLAT BASKET-ROUND

FLAT BASKET-SQUARE

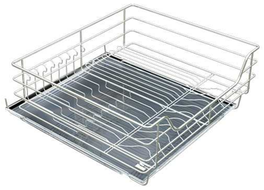

DISH RACK-ROUND

DISH RACK-SQUARE

2 in 1 of storage and drainage

FLAT BASKET-ROUND

ITEM CODE	CABINET	SIZE	TYPE	FINISH	MATERIAL
XH-03-004-644	600MM	W517*D460*H169MM	ROUND	CHROME	IRON/SUS 201/SUS 304
XH-03-004-645	700MM	W617*D460*H169MM	ROUND	CHROME	IRON/SUS 201/SUS 304
XH-03-004-646	800MM	W717*D460*H169MM	ROUND	CHROME	IRON/SUS 201/SUS 304
XH-03-004-647	900MM	W817*D460*H169MM	ROUND	CHROME	IRON/SUS 201/SUS 304

MOQ: EACH SPECIFICATION 50PCS

FLAT BASKET-SQUARE

ITEM CODE	CABINET	SIZE	TYPE	FINISH	MATERIAL
XH-03-004-648	600MM	W517*D460*H169MM	SQUARE	CHROME	IRON/SUS 201/SUS 304
XH-03-004-649	700MM	W617*D460*H169MM	SQUARE	CHROME	IRON/SUS 201/SUS 304
XH-03-004-650	800MM	W717*D460*H169MM	SQUARE	CHROME	IRON/SUS 201/SUS 304
XH-03-004-651	900MM	W817*D460*H169MM	SQUARE	CHROME	IRON/SUS 201/SUS 304

MOQ: EACH SPECIFICATION 50PCS

Base Cabinet Solution

NARROW BOTTLE
RACK

PARTITIONED STORAGE

WEATHER RESISTANT

EASY 4D INSTALLATION

STABILIZING CASTERS

PARTITION PROTECTORS

SILENT SOFT CLOSE

15KG PER LAYER

ANTI-SLIP DESIGN

EASY ACCESS

NARROW BOTTLE RACK

Base Cabinet Solution

Leveraging its pull-out tiers, it maximizes corner space utilization. It is ideally suited for storing a variety of items such as dry goods and snacks, keeping them neatly organized and easily accessible. Bid farewell to cluttered corners and embrace a tidy, efficient kitchen storage experience.

4D Adjustable & Easy to Install

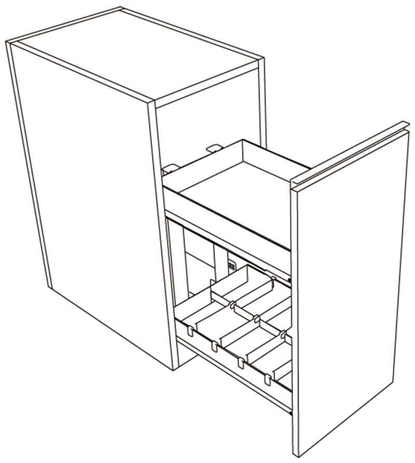

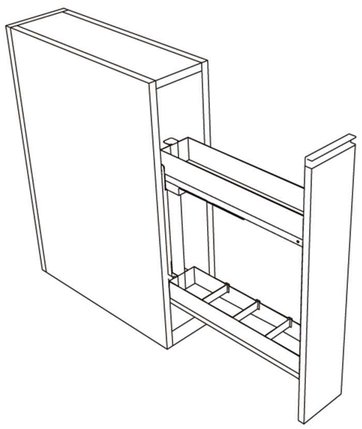

PLATE METAL-GREY（NARROW）/（WIDTH）

ITEM CODE	CABINET	LAYERS	SIZE	FINISH	MATERIAL
XH-03-004-677	150MM	2	W113*D469*H540MM	GREY/BLACK/WHITE	GALVANIZED STEEL
XH-03-004-678	200MM	2	W152*D469*H540MM	GREY/BLACK/WHITE	GALVANIZED STEEL
XH-03-004-679	250MM	2	W202*D469*H540MM	GREY/BLACK/WHITE	GALVANIZED STEEL
XH-03-004-680	300MM	2	W246*D469*H540MM	GREY/BLACK/WHITE	GALVANIZED STEEL
XH-03-004-681	350MM	2	W296*D469*H540MM	GREY/BLACK/WHITE	GALVANIZED STEEL
XH-03-004-682	400MM	2	W346*D469*H540MM	GREY/BLACK/WHITE	GALVANIZED STEEL

Accessory： W OR W/O ANTI-SLIP MAT
MOQ: EACH SPECIFICATION 50PCS

PLATE METAL-GREY（NARROW）/（WIDTH）

ITEM CODE	CABINET	LAYERS	SIZE	FINISH	MATERIAL
XH-03-004-683	150MM	3	W113*D469*H656MM	GREY/BLACK/WHITE	GALVANIZED STEEL
XH-03-004-684	200MM	3	W163*D469*H656MM	GREY/BLACK/WHITE	GALVANIZED STEEL
XH-03-004-685	250MM	3	W213*D469*H656MM	GREY/BLACK/WHITE	GALVANIZED STEEL
XH-03-004-686	300MM	3	W246*D469*H656MM	GREY/BLACK/WHITE	GALVANIZED STEEL
XH-03-004-687	350MM	3	W296*D469*H656MM	GREY/BLACK/WHITE	GALVANIZED STEEL
XH-03-004-688	400MM	3	W346*D469*H656MM	GREY/BLACK/WHITE	GALVANIZED STEEL

Accessory： W OR W/O ANTI-SLIP MAT
MOQ: EACH SPECIFICATION 50PCS

PLATE METAL-GREY（NARROW）

PLATE METAL-GREY（WIDTH）

PLATE METAL-GREY（NARROW）

PLATE METAL-GREY（WIDTH）

Base Cabinet Solution

BREAD
BASKET

- PARTITIONED STORAGE
- WEATHER RESISTANT
- EASY 4D INSTALLATION
- STABILIZING CASTERS
- PARTITION PROTECTORS
- SILENT GLIDE
- 15KG PER LAYER
- ANTI-SLIP DESIGN
- EASY ACCESS

BREAD BASKET

Base Cabinet Solution

Leveraging its pull-out tiers, it maximizes corner space utilization. It is ideally suited for storing a variety of items such as dry goods and snacks, keeping them neatly organized and easily accessible. Bid farewell to cluttered corners and embrace a tidy, efficient kitchen storage experience.

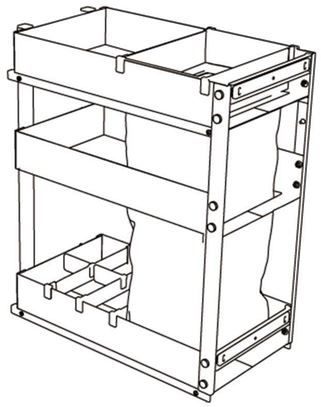

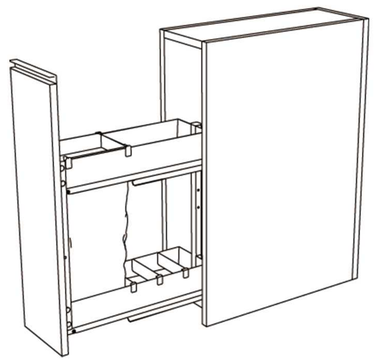

4D Adjustable & Easy to Install

PLATE METAL-GREY (NARROW)

PLATE METAL-GREY (WIDE)

PLATE METAL-GREY (NARROW)

PLATE METAL-GREY (WIDE)

PLATE METAL-GREY（NARROW）/（WIDTH）

ITEM CODE	CABINET	LAYERS	SIZE	DOOR PANEL	FINISH	MATERIAL
XH-03-004-689	200MM	2	W152*D469*H540MM	15-19MM	GREY/BLACK/WHITE	GALVANIZED STEEL
XH-03-004-690	250MM	2	W202*D469*H540MM	15-19MM	GREY/BLACK/WHITE	GALVANIZED STEEL
XH-03-004-691	300MM	2	W246*D469*H540MM	15-19MM	GREY/BLACK/WHITE	GALVANIZED STEEL
XH-03-004-692	350MM	2	W296*D469*H540MM	15-19MM	GREY/BLACK/WHITE	GALVANIZED STEEL
XH-03-004-693	400MM	2	W346*D469*H540MM	15-19MM	GREY/BLACK/WHITE	GALVANIZED STEEL

Accessory：W OR W/O ANTI-SLIP MAT
MOQ: EACH SPECIFICATION 50PCS

PLATE METAL-GREY（NARROW）/（WIDTH）

ITEM CODE	CABINET	LAYERS	SIZE	DOOR PANEL	FINISH	MATERIAL
XH-03-004-694	200MM	3	W163*D469*H656MM	15-19MM	GREY/BLACK/WHITE	GALVANIZED STEEL
XH-03-004-695	250MM	3	W213*D469*H656MM	15-19MM	GREY/BLACK/WHITE	GALVANIZED STEEL
XH-03-004-696	300MM	3	W246*D469*H656MM	15-19MM	GREY/BLACK/WHITE	GALVANIZED STEEL
XH-03-004-697	350MM	3	W296*D469*H656MM	15-19MM	GREY/BLACK/WHITE	GALVANIZED STEEL
XH-03-004-698	400MM	3	W346*D469*H656MM	15-19MM	GREY/BLACK/WHITE	GALVANIZED STEEL

Accessory：W OR W/O ANTI-SLIP MAT
MOQ: EACH SPECIFICATION 50PCS

Base Cabinet Solution

OVAL WIRE

BASKET

- PARTITIONED STORAGE
- WEATHER RESISTANT
- EASY 4D INSTALLATION
- STABILIZING CASTERS
- PARTITION PROTECTORS
- SILENT GLIDE
- 15KG PER LAYER
- ANTI-SLIP DESIGN
- EASY ACCESS

OVAL WIRE BASKET

Base Cabinet Solution

Leveraging its pull-out tiers, it maximizes corner space utilization. It is ideally suited for storing a variety of items such as dry goods and snacks, keeping them neatly organized and easily accessible. Bid farewell to cluttered corners and embrace a tidy, efficient kitchen storage experience.

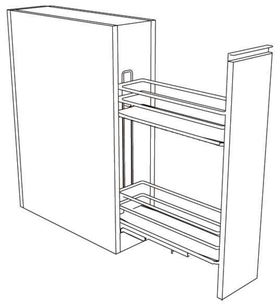

GREY
/
CHROME

ITEM CODE	CABINET	LAYERS	SIZE	FINISH	MATERIAL
XH-03-004-699	150MM	2	W98*D482*H532MM	CHROME/GREY	IRON
XH-03-004-700	200MM	2	W140*D482*H532MM	CHROME/GREY	IRON
XH-03-004-701	250MM	2	W190*D482*H532MM	CHROME/GREY	IRON
XH-03-004-702	300MM	2	W240*D482*H532MM	CHROME/GREY	IRON
XH-03-004-703	400MM	2	W290*D482*H532MM	CHROME/GREY	IRON
XH-03-004-704	400MM	2	W340*D482*H532MM	CHROME/GREY	IRON

Accessory: DIVIDER STRIP/COVER PLATE
MOQ: EACH SPECIFICATION 50PCS

GREY
/
CHROME

ITEM CODE	CABINET	LAYERS	SIZE	FINISH	MATERIAL
XH-03-004-705	150MM	3	W98*D482*H532MM	CHROME/GREY	IRON
XH-03-004-706	200MM	3	W140*D482*H532MM	CHROME/GREY	IRON
XH-03-004-707	250MM	3	W190*D482*H532MM	CHROME/GREY	IRON
XH-03-004-708	300MM	3	W240*D482*H532MM	CHROME/GREY	IRON
XH-03-004-709	400MM	3	W290*D482*H532MM	CHROME/GREY	IRON
XH-03-004-710	400MM	3	W340*D482*H532MM	CHROME/GREY	IRON

Accessory: DIVIDER STRIP/COVER PLATE
MOQ: EACH SPECIFICATION 50PCS

GREY（ANTI-SLIP MAT）

GREY（ANTI-SLIP MAT）

GREY

GREY

CHROME（ANTI-SLIP MAT）

CHROME（ANTI-SLIP MAT）

CHROME

CHROME

INSTRUCTIONS FOR USE

SIDE BASKET

COVER

Base Cabinet Solution

OVAL WIRE

BREAD BASKET

- PARTITIONED STORAGE
- WEATHER RESISTANT
- EASY 4D INSTALLATION
- STABILIZING CASTERS
- PARTITION PROTECTORS
- SILENT GLIDE
- 15KG PER LAYER
- ANTI-SLIP DESIGN
- EASY ACCESS

OVAL WIRE BREAD BASKET

Base Cabinet Solution

Leveraging its pull-out tiers, it maximizes corner space utilization. It is ideally suited for storing a variety of items such as dry goods and snacks, keeping them neatly organized and easily accessible. Bid farewell to cluttered corners and embrace a tidy, efficient kitchen storage experience.

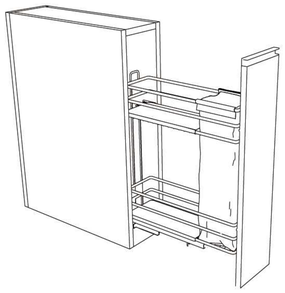

WHITE / GREY

ITEM CODE	CABINET	LAYERS	SIZE	FINISH	MATERIAL
XH-03-004-711	150MM	3	W98*D482*H532MM	GREY/CHROME	IRON
XH-03-004-712	200MM	3	W140*D482*H532MM	GREY/CHROME	IRON
XH-03-004-713	250MM	3	W190*D482*H532MM	GREY/CHROME	IRON
XH-03-004-714	300MM	3	W240*D482*H532MM	GREY/CHROME	IRON
XH-03-004-715	350MM	3	W290*D482*H532MM	GREY/CHROME	IRON
XH-03-004-716	400MM	3	W340*D482*H532MM	GREY/CHROME	IRON

Accessories: DIVIDER/BOARD/BREAD BAG
MOQ: EACH SPECIFICATION 50PCS

WHITE / GREY

ITEM CODE	CABINET	LAYERS	SIZE	FINISH	MATERIAL
XH-03-004-717	150MM	2	W98*D482*H532MM	GREY/CHROME	IRON
XH-03-004-718	200MM	2	W140*D482*H532MM	GREY/CHROME	IRON
XH-03-004-719	250MM	2	W190*D482*H532MM	GREY/CHROME	IRON
XH-03-004-720	300MM	2	W240*D482*H532MM	GREY/CHROME	IRON
XH-03-004-721	350MM	2	W290*D482*H532MM	GREY/CHROME	IRON
XH-03-004-722	400MM	2	W340*D482*H532MM	GREY/CHROME	IRON

Accessories: DIVIDER/BOARD/BREAD BAG
MOQ: EACH SPECIFICATION 50PCS

WHITE

GREY

GREY

WHITE

WHITE(NON-SLIP MAT)

GREY (NON-SLIP MAT)

GREY (NON-SLIP MAT)

WHITE(NON-SLIP MAT)

INSTRUCTIONS FOR USE

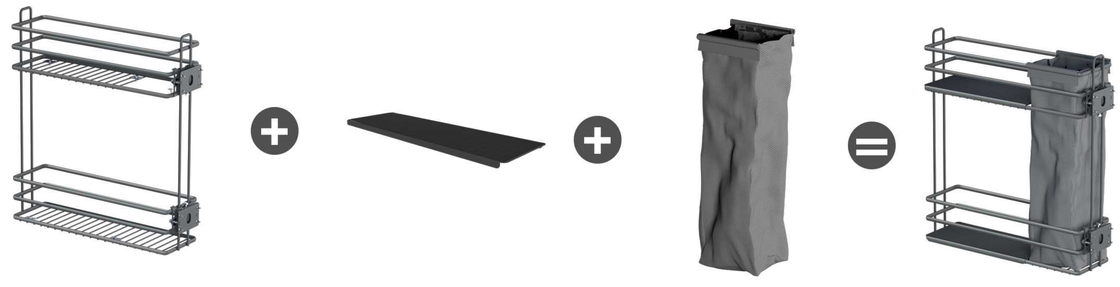

SIDE BASKET COVER BREAD BAG

ROUND WIRE NARROW BOTTLE BASKET

Base Cabinet Solution

Our corner cabinet storage solution maximizes kitchen corner space with rotating shelves, neatly organizing food, cookware, and tableware. It offers convenient access and a sleek design, keeping your kitchen tidy and efficient.

CHROME

ITEM CODE	CABINET	LAYERS	SIZE	FINISH	MATERIAL
XH-03-004-723	150MM	2	W95*D450*H500MM	CHROME	IRON
XH-03-004-724	200MM	2	W145*D450*H500MM	CHROME	IRON
XH-03-004-725	250MM	2	W195*D450*H500MM	CHROME	IRON
XH-03-004-726	300MM	2	W245*D450*H500MM	CHROME	IRON

Accessory: EACH SPECIFICATION 50PCS

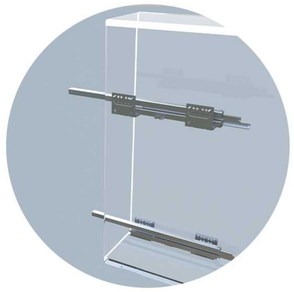

Cross Installation improve stability

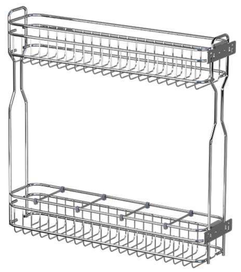

CHROME

Tall Cabinet Solution

Tall Cabinet Solution

PULL OUT

PANTRY

MULTI-HOLE BASKET

EASY CLEANING

REINFORCED METAL HOOK

0.8m² / 5m²

SAVES AMPLE SPACE

SEPARATE LAYERS

SILENT SOFT CLOSE

60-80kg

60-80KG CAPACITY

INSTANT ACCESS

LARGE NYLON WHEELS

PULL OUT PANTRY

Tall Cabinet Solution

Leveraging its pull-out tiers, it maximizes corner space utilization. It is ideally suited for storing a variety of items such as dry goods and snacks, keeping them neatly organized and easily accessible. Bid farewell to cluttered corners and embrace a tidy, efficient kitchen storage experience.

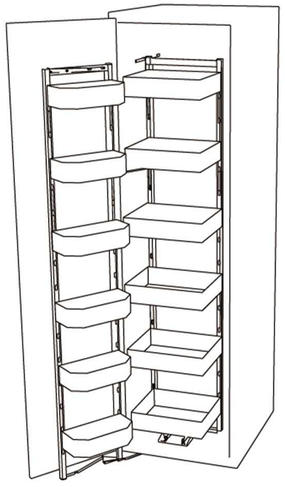

PLATE METAL-GREY

ITEM CODE	CABINET	LAYERS	SIZE	FINISH	MATERIAL
XH-03-004-727	450MM	4	W440*D495*H1260MM	GREY	GALVANIZED STEEL
XH-03-004-728	450MM	5	W440*D495*H1560MM	GREY	GALVANIZED STEEL
XH-03-004-729	450MM	6	W440*D495*H1860MM	GREY	GALVANIZED STEEL
XH-03-004-730	600MM	4	W440*D495*H1260MM	GREY	GALVANIZED STEEL
XH-03-004-731	600MM	5	W440*D495*H1560MM	GREY	GALVANIZED STEEL
XH-03-004-732	600MM	6	W440*D495*H1860MM	GREY	GALVANIZED STEEL

Accessories: W OR W/O ANTI-SLIP MAT
MOQ: EACH SPECIFICATION 50PCS

BOARD-GREY

ITEM CODE	CABINET	LAYERS	SIZE	FINISH	MATERIAL
XH-03-004-733	450MM	4	W440*D495*H1260MM	GREY	IRON+MDF
XH-03-004-734	450MM	5	W440*D495*H1560MM	GREY	IRON+MDF
XH-03-004-735	450MM	6	W440*D495*H1860MM	GREY	IRON+MDF
XH-03-004-736	600MM	4	W440*D495*H1260MM	GREY	IRON+MDF
XH-03-004-737	600MM	5	W440*D495*H1560MM	GREY	IRON+MDF
XH-03-004-738	600MM	6	W440*D495*H1860MM	GREY	IRON+MDF

Accessories: W OR W/O ANTI-SLIP MAT
MOQ: EACH SPECIFICATION 50PCS

PLATE METAL-GREY

BOARD-BLACK

GLASS-GREY

IRON-WIRE

GLASS-GREY

ITEM CODE	CABINET	LAYERS	SIZE	FINISH	MATERIAL
XH-03-004-739	450MM	4	W440*D495*H1260MM	GREY	GLASS+ALU
XH-03-004-740	450MM	5	W440*D495*H1560MM	GREY	GLASS+ALU
XH-03-004-741	450MM	6	W440*D495*H1860MM	GREY	GLASS+ALU
XH-03-004-742	600MM	4	W440*D495*H1260MM	GREY	GLASS+ALU
XH-03-004-743	600MM	5	W440*D495*H1560MM	GREY	GLASS+ALU
XH-03-004-744	600MM	6	W440*D495*H1860MM	GREY	GLASS+ALU

Accessories: W OR W/O ANTI-SLIP MAT
MOQ: EACH SPECIFICATION 50PCS

IRON-WIRE

ITEM CODE	CABINET	LAYERS	SIZE	FINISH	MATERIAL
XH-03-004-745	450MM	4	W440*D495*H1260MM	CHROME	IRON
XH-03-004-746	450MM	5	W440*D495*H1560MM	CHROME	IRON
XH-03-004-747	450MM	6	W440*D495*H1860MM	CHROME	IRON
XH-03-004-748	600MM	4	W440*D495*H1260MM	CHROME	IRON
XH-03-004-749	600MM	5	W440*D495*H1560MM	CHROME	IRON
XH-03-004-750	600MM	6	W440*D495*H1860MM	CHROME	IRON

MOQ: EACH SPECIFICATION 50PCS

Wall Cabinet Solution

Wall Cabinet Solution

ELEVATOR
BASKET

CORROSION RESISTANT

EASY CLEANING

2min

2-MINS ASSEMBLY

4 GEAR

4-LEVEL ADJUSTMENT

USES TOP SPACE

DRAIN & STORE

1-12KG

WEIGHT: 1-12KG

ANTI-SLIP DESIGN

Safety

SAFER BUFFERING

ELEVATOR BASKET

Wall Cabinet Solution

Leveraging its pull-out tiers, it maximizes corner space utilization. It is ideally suited for storing a variety of items such as dry goods and snacks, keeping them neatly organized and easily accessible. Bid farewell to cluttered corners and embrace a tidy, efficient kitchen storage experience.

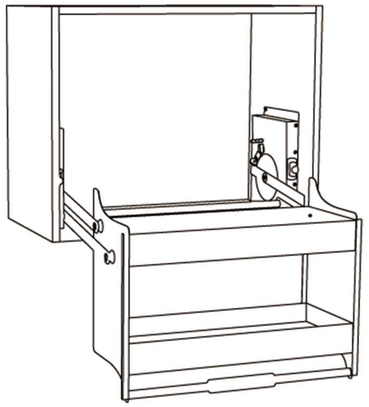

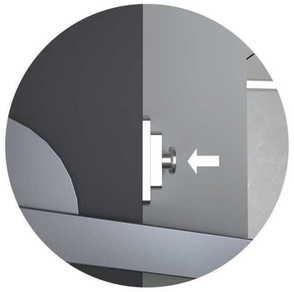

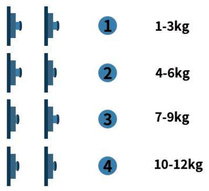

PLATE METAL-GREY

IRON/SUS-BLACK(ROUND)

IRON/SUS-BLACK(SQUARE)

GLASS-GREY

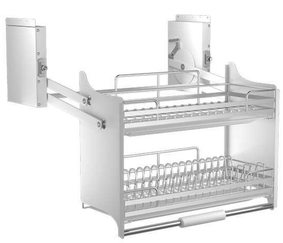

IRON/SUS-WHITE(ROUND)

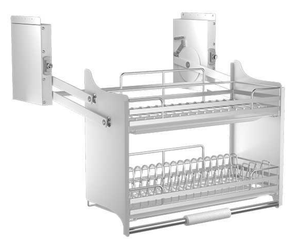

IRON/SUS-WHITE(SQUARE)

PLATE METAL-GREY

ITEM CODE	CABINET	SIZE	DOOR PANEL	FINISH	MATERIAL
XH-03-004-751	600MM	W560*D260*H545MM	18MM	GREY/BLACK/WHITE	GALVANIZED STEEL PLATE
XH-03-004-752	700MM	W660*D260*H545MM	18MM	GREY/BLACK/WHITE	GALVANIZED STEEL PLATE
XH-03-004-753	800MM	W760*D260*H545MM	18MM	GREY/BLACK/WHITE	GALVANIZED STEEL PLATE
XH-03-004-754	900MM	W860*D260*H545MM	18MM	GREY/BLACK/WHITE	GALVANIZED STEEL PLATE

Accessories: W OR W/O ANTI-SLIP MAT
MOQ: EACH SPECIFICATION 50PCS

IRON/SUS-BLACK(SQUARE/ROUND)
/
IRON/SUS-WHITE(SQUARE/ROUND)

ITEM CODE	CABINET	SIZE	DOOR PANEL	FINISH	MATERIAL
XH-03-004-755/805	600MM	W560*D260*H545MM	18MM	GREY/BLACK/WHITE	IRON/SUS 201/SUS304
XH-03-004-756/806	700MM	W660*D260*H545MM	18MM	GREY/BLACK/WHITE	IRON/SUS 201/SUS304
XH-03-004-757/807	800MM	W760*D260*H545MM	18MM	GREY/BLACK/WHITE	IRON/SUS 201/SUS304
XH-03-004-758/808	900MM	W860*D260*H545MM	18MM	GREY/BLACK/WHITE	IRON/SUS 201/SUS304

MOQ: EACH SPECIFICATION 50PCS

GLASS-GREY

ITEM CODE	CABINET	SIZE	DOOR PANEL	FINISH	MATERIAL
XH-03-004-759	600MM	W560*D260*H545MM	18MM	GREY	GRASS+MDF+ALU
XH-03-004-760	700MM	W660*D260*H545MM	18MM	GREY	GRASS+MDF+ALU
XH-03-004-761	800MM	W760*D260*H545MM	18MM	GREY	GRASS+MDF+ALU
XH-03-004-762	900MM	W860*D260*H545MM	18MM	GREY	GRASS+MDF+ALU

Accessories: W OR W/O ANTI-SLIP MAT
MOQ: EACH SPECIFICATION 50PCS

ELEVATOR BASKET

Wall Cabinet Solution

Leveraging its pull-out tiers, it maximizes corner space utilization. It is ideally suited for storing a variety of items such as dry goods and snacks, keeping them neatly organized and easily accessible. Bid farewell to cluttered corners and embrace a tidy, efficient kitchen storage experience.

Extra storage space

GLASS-GREY

ITEM CODE	CABINET	SIZE	FINISH	MATERIAL
XH-03-004-809	600MM	W(564-568)*D290*H457	GREY	GLASS+MDF+ALU
XH-03-004-810	700MM	W(664-668)*D290*H457	GREY	GLASS+MDF+ALU
XH-03-004-811	800MM	W(764-768)*D290*H457	GREY	GLASS+MDF+ALU
XH-03-004-812	900MM	W(864-868)*D290*H457	GREY	GLASS+MDF+ALU

Accessory: W OR W/O ANTI-SLIP MAT
MOQ: EACH SPECIFICATION 50PCS

GLASS-GREY

Wall Cabinet Solution

DISH
RACK

Thickened

DURABLE THICKENED PLASTIC

EASY CLEANING

2min

2-MINUTE INSTALLATION

DRAIN & STORE

MAXIMIZES TOP SPACE

RUST & MOLD PROOF

24KG/ EACH FLOOR

LOAD: 24KG/LAYER

DRIP-FREE SLIDING

ANTI-SHAKE DESIGN

DISH RACK

Wall Cabinet Solution

Leveraging its pull-out tiers, it maximizes corner space utilization. It is ideally suited for storing a variety of items such as dry goods and snacks, keeping them neatly organized and easily accessible. Bid farewell to cluttered corners and embrace a tidy, efficient kitchen storage experience.

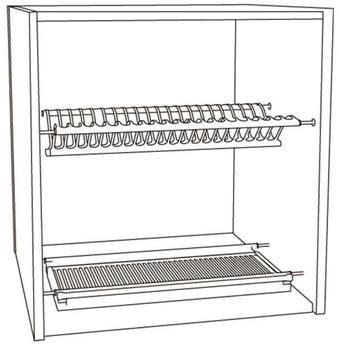

Loading capacity reach **24kgs**/Layer

GREY

ITEM CODE	CABINET WIDTH	SIZE	PIN	MATERIAL
XH-03-004-770	400	W365*D280*H65MM	ALU/IRON	STAINLESS STEEL 201/304
XH-03-004-771	500	W465*D280*H65MM	ALU/IRON	STAINLESS STEEL 201/304
XH-03-004-772	600	W565*D280*H65MM	ALU/IRON	STAINLESS STEEL 201/304
XH-03-004-773	700	W665*D280*H65MM	ALU/IRON	STAINLESS STEEL 201/304
XH-03-004-774	800	W765*D280*H65MM	ALU/IRON	STAINLESS STEEL 201/304
XH-03-004-775	900	W865*D280*H65MM	ALU/IRON	STAINLESS STEEL 201/304
XH-03-004-776	1000	W965*D280*H65MM	ALU/IRON	STAINLESS STEEL 201/304

MOQ: EACH SPECIFICATION 100PCS

BLACK GREY CHROME

BLACK

ITEM CODE	CABINET WIDTH	SIZE	PIN	MATERIAL
XH-03-004-777	400	W365*D280*H65MM	ALU/IRON	STAINLESS STEEL 201/304
XH-03-004-778	500	W465*D280*H65MM	ALU/IRON	STAINLESS STEEL 201/304
XH-03-004-779	600	W565*D280*H65MM	ALU/IRON	STAINLESS STEEL 201/304
XH-03-004-780	700	W665*D280*H65MM	ALU/IRON	STAINLESS STEEL 201/304
XH-03-004-781	800	W765*D280*H65MM	ALU/IRON	STAINLESS STEEL 201/304
XH-03-004-782	900	W865*D280*H65MM	ALU/IRON	STAINLESS STEEL 201/304
XH-03-004-783	1000	W965*D280*H65MM	ALU/IRON	STAINLESS STEEL 201/304

MOQ: EACH SPECIFICATION 100PCS

CHROME

ITEM CODE	CABINET WIDTH	SIZE	PIN	MATERIAL
XH-03-004-763	400	W365*D280*H65MM	ALU/IRON	STAINLESS STEEL 201/304
XH-03-004-764	500	W465*D280*H65MM	ALU/IRON	STAINLESS STEEL 201/304
XH-03-004-765	600	W565*D280*H65MM	ALU/IRON	STAINLESS STEEL 201/304
XH-03-004-766	700	W665*D280*H65MM	ALU/IRON	STAINLESS STEEL 201/304
XH-03-004-767	800	W765*D280*H65MM	ALU/IRON	STAINLESS STEEL 201/304
XH-03-004-768	900	W865*D280*H65MM	ALU/IRON	STAINLESS STEEL 201/304
XH-03-004-769	1000	W965*D280*H65MM	ALU/IRON	STAINLESS STEEL 201/304

MOQ: EACH SPECIFICATION 100PCS

Wall Cabinet Solution

C-DISH

RACK

Thickened

DURABLE THICKENED PLASTIC

EASY CLEANING

2min

2-MINUTE INSTALLATION

DRAIN & STORE

L-SHAPED DESIGN

RUST & MOLD PROOF

24KG/ EACH FLOOR

LOAD: 24KG/LAYER

DRIP-FREE SLIDING

ANTI-SLIP GRID

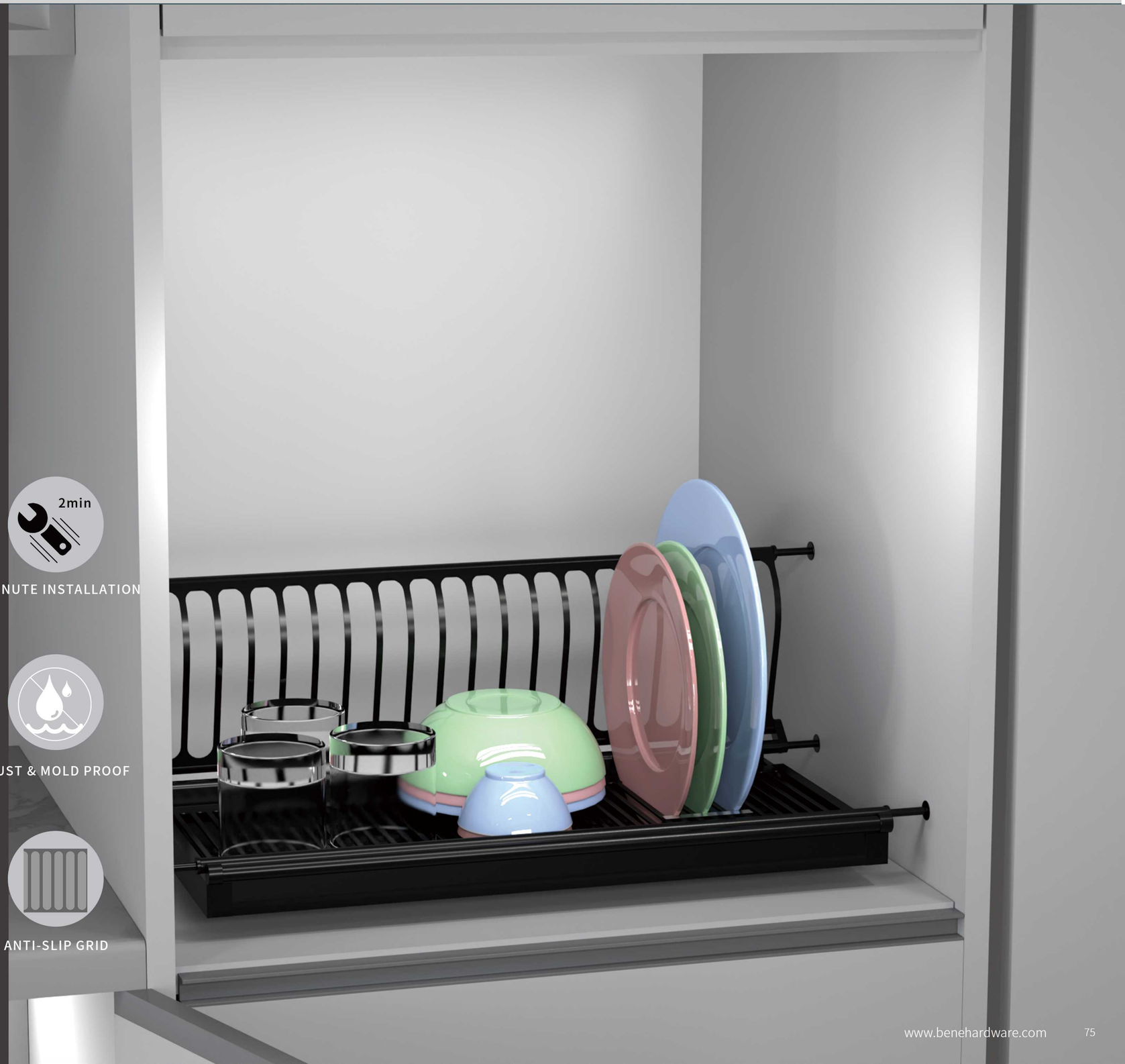

C-DISH RACK

Wall Cabinet Solution

Leveraging its pull-out tiers, it maximizes corner space utilization. It is ideally suited for storing a variety of items such as dry goods and snacks, keeping them neatly organized and easily accessible. Bid farewell to cluttered corners and embrace a tidy, efficient kitchen storage experience.

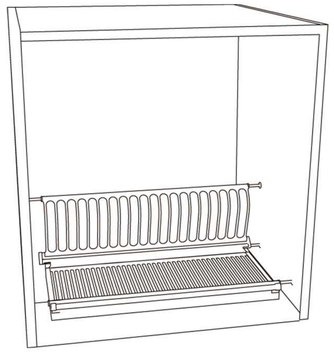

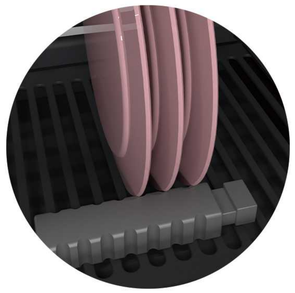

Upgrade The Clips for fix the plate

GREY

ITEM CODE	CABINET WIDTH	SIZE	PIN	MATERIAL
XH-03-004-791	400	W365*D280*H65MM	ALU/IRON	STAINLESS STEEL 201/304
XH-03-004-792	500	W465*D280*H65MM	ALU/IRON	STAINLESS STEEL 201/304
XH-03-004-793	600	W565*D280*H65MM	ALU/IRON	STAINLESS STEEL 201/304
XH-03-004-794	700	W665*D280*H65MM	ALU/IRON	STAINLESS STEEL 201/304
XH-03-004-795	800	W765*D280*H65MM	ALU/IRON	STAINLESS STEEL 201/304
XH-03-004-796	900	W865*D280*H65MM	ALU/IRON	STAINLESS STEEL 201/304
XH-03-004-797	1000	W965*D280*H65MM	ALU/IRON	STAINLESS STEEL 201/304

Accessory: CLIPS
MOQ: EACH SPECIFICATION 100PCS

BLACK

GREY

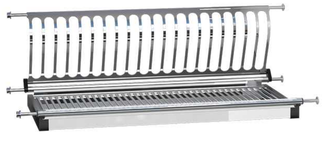

CHROME

BLACK

ITEM CODE	CABINET WIDTH	SIZE	PIN	MATERIAL
XH-03-004-798	400	W365*D280*H65MM	ALU/IRON	STAINLESS STEEL 201/304
XH-03-004-799	500	W465*D280*H65MM	ALU/IRON	STAINLESS STEEL 201/304
XH-03-004-800	600	W565*D280*H65MM	ALU/IRON	STAINLESS STEEL 201/304
XH-03-004-801	700	W665*D280*H65MM	ALU/IRON	STAINLESS STEEL 201/304
XH-03-004-802	800	W765*D280*H65MM	ALU/IRON	STAINLESS STEEL 201/304
XH-03-004-803	900	W865*D280*H65MM	ALU/IRON	STAINLESS STEEL 201/304
XH-03-004-804	1000	W965*D280*H65MM	ALU/IRON	STAINLESS STEEL 201/304

Accessory: CLIPS
MOQ: EACH SPECIFICATION 100PCS

CHROME

ITEM CODE	CABINET WIDTH	SIZE	PIN	MATERIAL
XH-03-004-784	400	W365*D280*H65MM	ALU/IRON	STAINLESS STEEL 201/304
XH-03-004-785	500	W465*D280*H65MM	ALU/IRON	STAINLESS STEEL 201/304
XH-03-004-786	600	W565*D280*H65MM	ALU/IRON	STAINLESS STEEL 201/304
XH-03-004-787	700	W665*D280*H65MM	ALU/IRON	STAINLESS STEEL 201/304
XH-03-004-788	800	W765*D280*H65MM	ALU/IRON	STAINLESS STEEL 201/304
XH-03-004-789	900	W865*D280*H65MM	ALU/IRON	STAINLESS STEEL 201/304
XH-03-004-790	1000	W965*D280*H65MM	ALU/IRON	STAINLESS STEEL 201/304

Accessory: CLIPS
MOQ: EACH SPECIFICATION 100PCS

Trash Can Series

TRASH CAN SERIES

DUST
BIN

8L
8L CAPACITY

EASY CLEANING

QUICK ASSEMBLY

PORTABLE RACK

ODOR-PROOF

SILENT GLIDE

600
300
500
400
MULTIPLE SIZES

CONCEALED DESIGN

DIY
MODULAR STORAGE

DUST BIN

Trash Can Series

Leveraging its pull-out tiers, it maximizes corner space utilization. It is ideally suited for storing a variety of items such as dry goods and snacks, keeping them neatly organized and easily accessible. Bid farewell to cluttered corners and embrace a tidy, efficient kitchen storage experience.

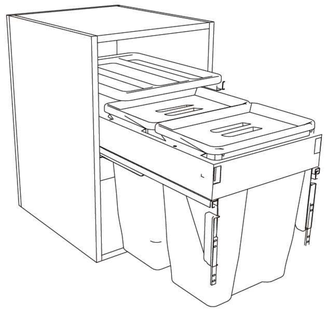

Hanging On The Panel,convenient disposal of waste

Can store cleaning tools,**Portable Storage**

18L+18L+10L+10L

30L+30L

18L+6L+5L

18L+18L

30L

18+6L

ITEM CODE	CABINET	SIZE	CAPACITY	FINISH	MATERIAL
XH-03-005-12	300MM	W265*D500*H500MM	18+6L	GREY	ABS FRAME + PP BIN
XH-03-005-8	400MM	W365*D500*H500MM	30L	GREY	ABS FRAME + PP BIN
XH-03-005-15	400MM	W365*D500*H500MM	18L+18L	GREY	ABS FRAME + PP BIN
XH-03-005-29	400MM	W365*D500*H500MM	18L+6L+5L	GREY	ABS FRAME + PP BIN
XH-03-005-11	450MM	W415*D500*H500MM	30L+30L	GREY	IRON FRAME + PP BIN
XH-03-005-30	500MM	W465*D500*H500MM	30L+30L	GREY	IRON FRAME + PP BIN
XH-03-005-21	600MM	W565*D500*H500MM	30L+30L	GREY	IRON FRAME + PP BIN
XH-03-005-28	600MM	W565*D500*H500MM	18L+18L+10L+10L	GREY	IRON FRAME + PP BIN

Accessory: ABS COVER+PP MINI DRAWER
MOQ: EACH SPECIFICATION 50PCS